# M3D Matrix Surround Sound for Techies

# A New Cost Effective, Image-Corrected Matrix Surround Sound and Ambiance Decoder for 4.1 Speaker System Applications


### Key Words
Matrix surround decoding, surround sound, ambiance surround, four-channel multimedia speaker system, 4.1 speaker system.


### Patent Goal
Copy protection of a simple circuit that achieves surround or ambiance sound from a four-channel sound card compatible multimedia speaker system when not used with a four-channel sound source, but a standard stereo sound source. In other words, it allows the rear speakers in a "4.1" speaker system to be used as surround or ambiance sound when used with a standard stereo source).


### Abstract
This paper first discusses the 4.1 channel multimedia speaker system and its application to the popular four-channel multimedia sound sources, such as the ones found in gaming computer systems. Then discussion ensues of adding value to standard stereo sources by utilizing the rear speakers for matrix or ambiance surround reproduction. Discussion follows by pointing out the problems that arise with standard decoding methods. A new simple circuit is then presented for the decoding function that addresses the issues.


### Problem Statement
The block diagram of a multimedia 4.1-channel speaker system designed for use with four-channel computer sound cards, such as the Sound Blaster Live! is outlined below in figure 1. The speaker system is designed to input four channels of audio signal and output the amplified signal to four speakers: two placed in front as a front left and right pair, and two placed behind the listener as a rear left and right pair. To provide for a fuller and richer sound, a subwoofer is added to the system. As the four-channel sound source is capable of containing low frequency information in any or all of the four channels, the subwoofer crossover circuit must obtain signal from all four inputs. A typical subwoofer crossover will sum all the input signals and filter out the audio information above approximately 150 Hz. As shown in figure 1, the circuit has inputs for four sound sources. The four channels are passed onto individual high-pass filters and power amplifiers for driving the four full-range satellite speakers. The subwoofer crossover sums all four channels together, then low-pass filters the content and sends it to the power amplifier to drive the subwoofer driver.

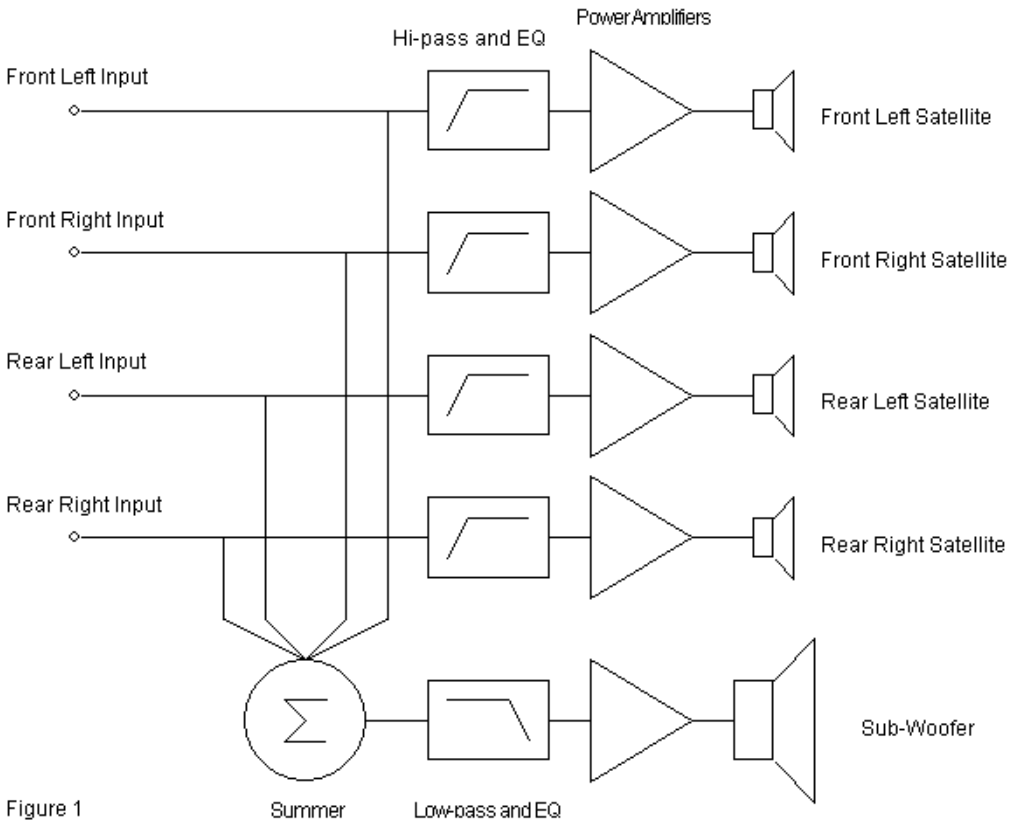

Figure 1

Should this speaker system be used with a standard two-channel stereo source, such as a standard computer sound card or CD player, the rear channels will not be active because there is no rear channel audio information to be reproduced.

In order to make these rear speakers useful to users of standard stereo sources, the "ambiance" or "matrix surround" information can be decoded from standard stereo tracks or even Dolby Pro-Logic encoded sound tracks and applied to the rear speakers. It is well known that ambiance information in a stereo music recording is defined as the "room" or "reverberant" sounds. This ambiance signal is contained in the difference signal between the left and right audio tracks. This difference signal can be decoded out of a stereo audio track by subtracting one channel from the other. This is the basis of how Dolby surround-sound encoding and decoding works. Dolby encoding simply encodes a surround track into a stereo pair by adding the surround track to one channel, say the left channel, and the inverse of the surround track to the other, the right. The decoding simply subtracts right from left to obtain the decoded original surround track. Dolby further embellishes the surround sound expedience by further processing the surround channel to enhance the effect.

By simply designing in a difference amplifier into the circuit to do a L-R subtraction and applying that signal to the rear channels, we not only can enhance the stereo music listening experience, but we can also decode the basic surround track out of Dolby encoded material.

This technique is not new. People started making primitive surround systems not long after the advent of stereo. One simple solution was to connect a rear speaker to the positive terminals of the stereo left and right outputs (i.e. the positive terminal of the rear speaker connected the positive terminal of the left output and the negative terminal of the rear speaker connected to the positive terminal of the right output. See figure 2).

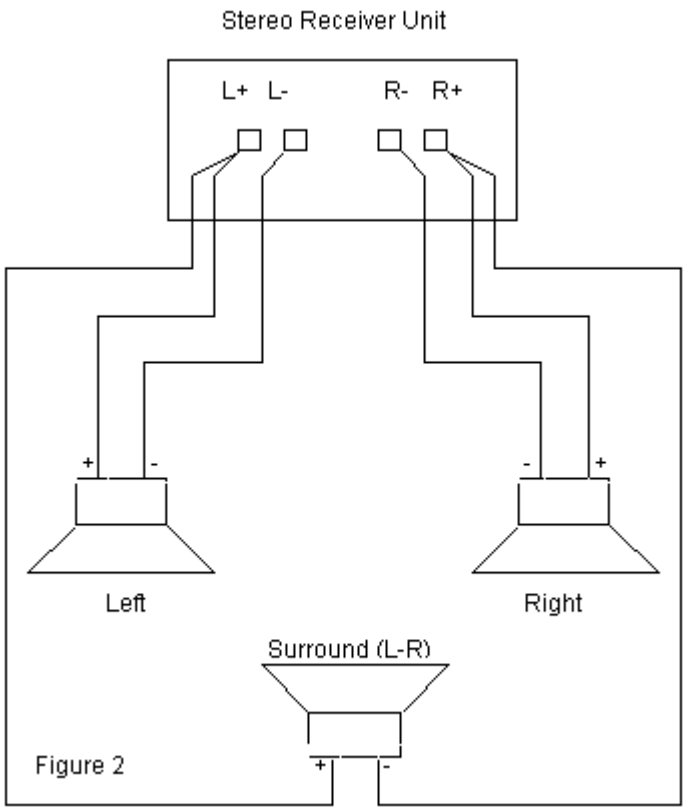

Figure 2

Implementing this type of L-R decoding in the 4.1 speaker system described above could be as simple as designing in a differential amplifier circuit to generate the L-R signal and applying it to the rear channels as shown in figure 3.

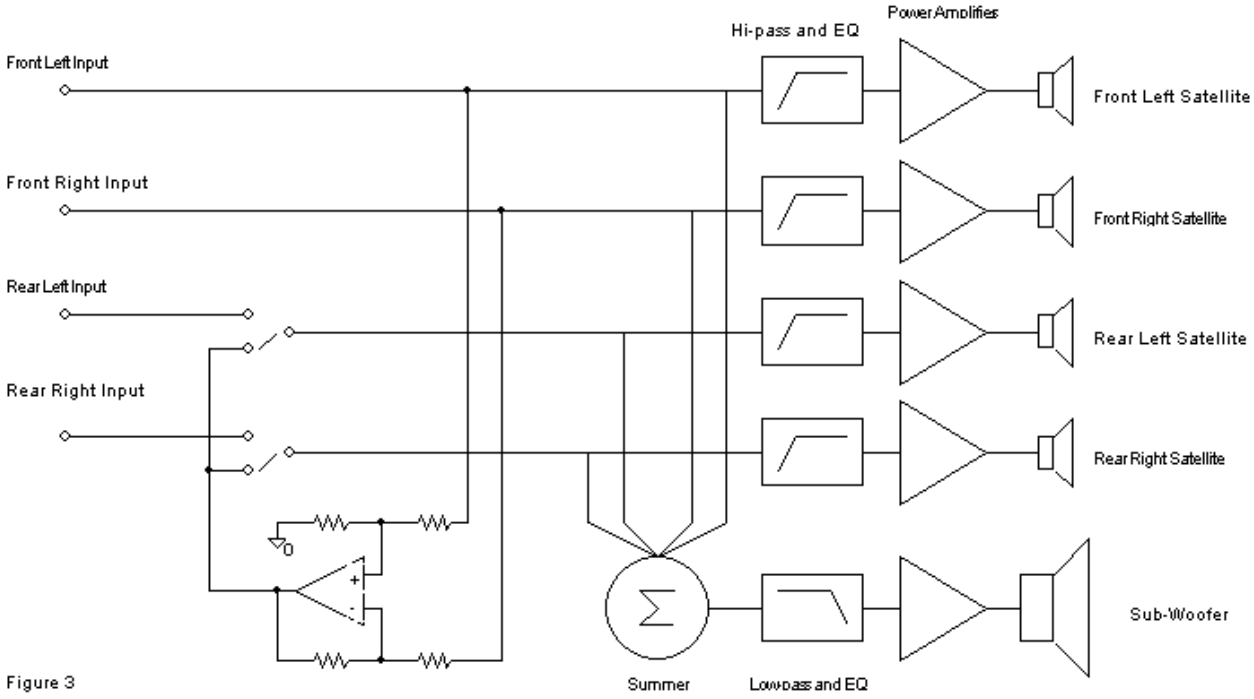

Figure 3

However, this approach has a couple of problems that make it an undesirable implementation. Firstly, with the separation of the rear channel speakers, the imaging of the front sound stage will be radically skewed because of the phasing relationships presented by the L-R difference signal. Secondly, the operation of the subwoofer will be incorrect.

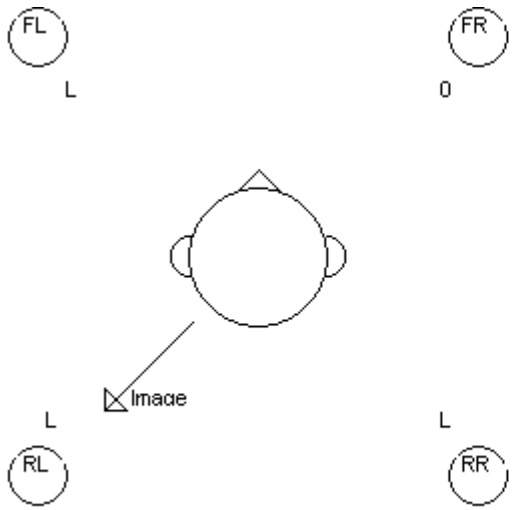


Figure 4a

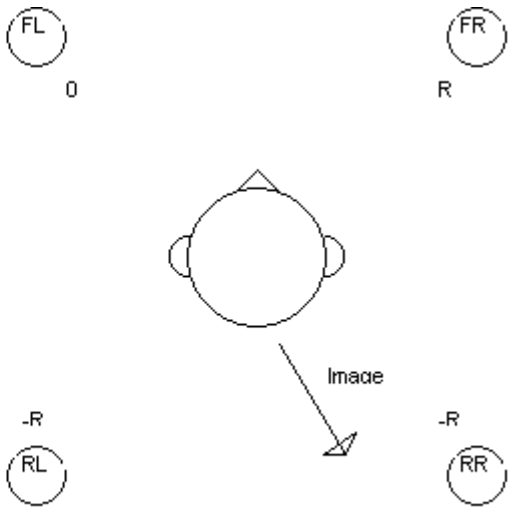


Figure 4b

As figure 4 illustrates, both the rear speakers delivering a L-R signal will shift the normal listening sound stage. This can be shown with an extreme example: with a signal source that has content only in the left channel (say L=1 and R=0), each of the speakers will have output as shown in figure 4a. The front left and both rear channels delivering the L=1 signal thus drag the image to the rear left. With the opposite extreme, signal content only in the right channel, both rear speakers are delivering a R=-1 signal and the front right with an R=1. This will tend to push the image away from the right side and more to the rear again as illustrated in figure 4b.

In addition to the imaging problems, the circuit topology of figure 3 also plays havoc with the subwoofer's response. Upon examination of the 4.1 circuit in figure 3, the mathematics of which signals go to the sub are the following (ignoring the frequency compensation math):

*Subwoofer = Left + Right + (Left − Right) + (Left − Right)*

*Subwoofer = 3 x Left - Right*

The normal operation of the subwoofer, as described earlier, would simply be the summation of the left and right channels. For a mono low frequency signal (Left = Right = M), this equation shows that the sub will act correctly. However, with a low frequency signal steered to the left or to the right, a left signal will have three times as much bass as a right signal. Moreover, the right will be inverted, causing an undesirable hole in the frequency response.

Dolby decoding avoids both these problems by incorporating a complex circuit to phase shift and/or delay the rear channel information so that it arrives much later to the listener, thus not interfering with the front sound stage. In a typical Pro-Logic stereo system, the rear channel would not be directed to the woofer either.

## The New Topology Solution

The solution to the imaging and subwoofer problems in the 4.1 speaker system is to simply invert the right-rear satellite signal. The resultant signals for the rear channels are left rear =L-R and right rear =R-L. Study of the extreme cases outlined above are illustrated in figure 5. Not only are the images symmetrical, they are actually pushed further away from the actual speakers, thus giving a "wide stereo" effect along with the rear ambiance.

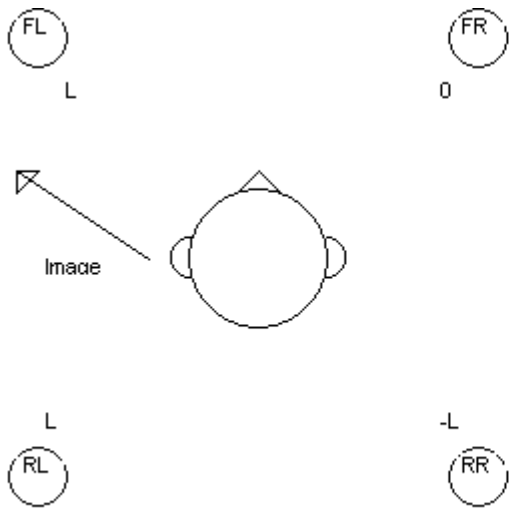


Figure 5a

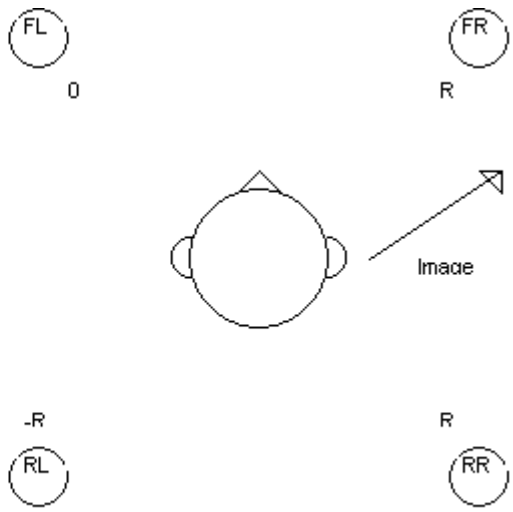


Figure 5b

This topology not only is far simpler than a Dolby type circuit, it also presents a far more immersive effect for the listener because the rear channels are not delayed and are integral to the presentation of the image, reminiscent of the old "Quadraphonic" sound systems of the 1970's. Because the direction of audio high frequencies is less perceptible to the ear, this immersive effect can be enhanced by band-passing the rear channel signals.

Study of the equations governing the operation of the woofer will show that the subwoofer now operates correctly as well.

*Subwoofer = Left + Right + (Left – Right) - (Left – Right)*

*Subwoofer = Left + Right*

## Example Circuit

The first thought that comes to mind is "why not just wire the right rear satellite out-of-phase?" The answer is that wiring the right rear satellite out-of-phase will make the circuit incompatible to four channel input operation and will not correct the subwoofer problem.

In figure 6, we see one example of a circuit topology that achieves all the goals: four-channel input compatibility, image-corrected stereo matrix surround and correct operation of the subwoofer.

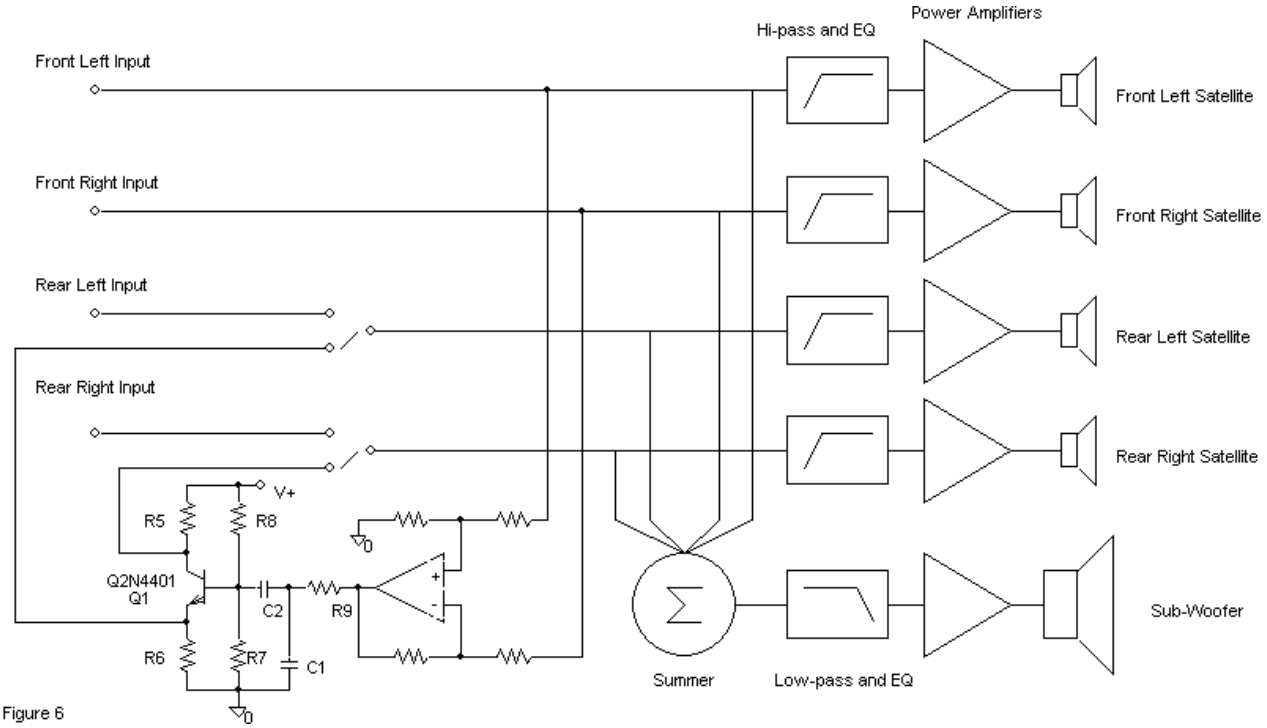

Figure 6

The description of the circuit is as follows: the operational amplifier is configured as a differential amplifier so as to subtract the front right signal from the front left (alternately, with a standard stereo input, stereo right from stereo left), generating a L-R signal. The signal is band-passed by components R9, C1, C2 and the input impedance of the transistor Q1 circuit. The transistor amplifier is designed to be a unity gain differential driver providing both a L-R and R-L signal. This function could also be obtained with more operational amplifiers instead of a transistor circuit. The L-R signal is fed to the rear left input, and the R-L signal is fed to the rear right input. The switch simply allows you to switch between a four-channel input and the matrix surround effect with a stereo input.

## Conclusion

This paper discussed how to make a simple and effective, image-corrected matrix surround circuit that can be easily implemented in a 4.1 speaker system designed to be compatible with four-channel sound sources.