# Logitech Audio

Q&A

Q: How do speakers work?
A: Speakers create sound by exciting sound waves with the piston-like movement of the diaphragm, which is generated by the interaction of the voice coil and the magnets. The voice coil is a long strand of thin wire wrapped tightly around a cylinder. Signals from an amplifier are fed into the voice coil; they travel through the series of wire loops, creating an electromagnetic field. The field fluctuates with the signal, becoming positive or negative along with the polarity of the signal, and increasing or decreasing in power along with the signal. The magnet is attached to the frame while the voice coil moves independently.
Since the voice coil creates a magnetic field as current passes through it, that field is attracted to or repelled by the field of the stationary magnet. When a signal is applied to the voice coil, the magnetic field that is created causes the voice coil and subsequently the entire diaphragm to which it is attached to move towards or away from the stationary magnet. Thus the voice coil and its magnetic field create the movement of the diaphragm, which in turn moves air to generate sound waves that we can hear.

Q: What are phase plugs?
A: Phase plugs are the machined aluminium element in the middle of the Z-560 satellite drivers.

Q: What is their use?
A: Ultimately, the goal of all sound systems is to reproduce the source material as accurately as possible. As any kind of coloration of the sound is really a form of distortion, anything that reduces coloration/distortion enables more accurate sound reproduction.

Phase plugs provide higher power handling, low compression due to temperature fluctuations in the voice coil and completely eliminate resonance that would otherwise occur in the cavity between the pole piece and the dust cap. Furthermore, the phase plugs extend the frequency response range and offer several other significant advantages over standard drivers, resulting in improved fidelity, less coloration and better power handling.

Q: How do they work?
A: First, let’s take a look at the parts of a driver in the following diagram:

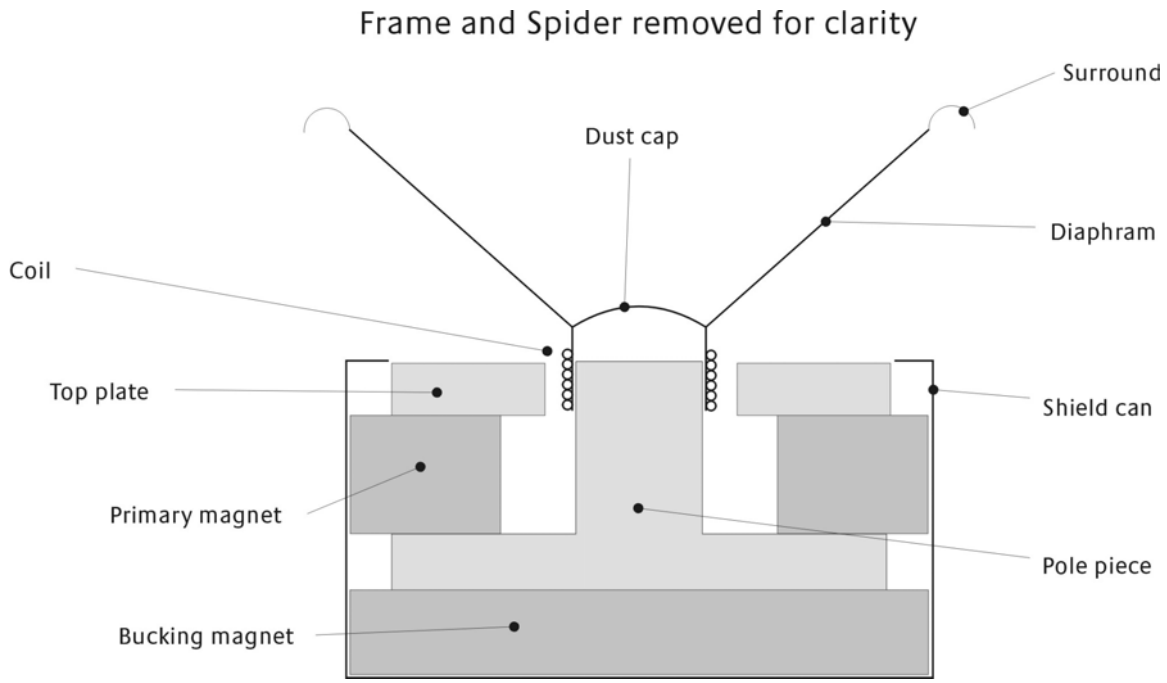


This diagram shows the part of a typical shielded driver (the bucking magnet and shield allow the driver to be placed near a monitor without distortion).

Following is a diagram of the Z-560 driver. The phase plug sits in place of the dust cap.

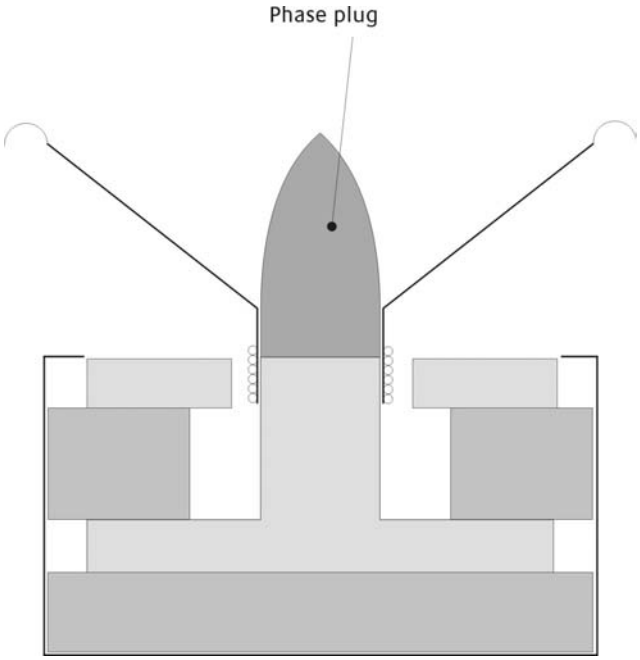


The diaphragm in the driver on the right moves while the phase plug remains stationary. It's this movement of the diaphragm that capitalizes on the phase plug design. As the diaphragm moves back and forth, the created sound waves radiate outwards. However, not all waves are sent directly out of the diaphragm. Some bounce across the acoustic chamber of the diaphragm and are then reflected out to the listener. In the illustration below you can see the path of sound waves created on the left side of the diaphragm. With a standard driver, the sound wave exits the diaphragm and travels to the other side of the diaphragm before being reflected out to the listener. Since these sound waves are generated at the same time but reach the listener at different times, the sound is distorted. On the other hand, the phase

plug reflects the sound wave much sooner, decreasing the lag time for the second wave to reach the listener. In this way, the phase plug greatly extends the frequency response, allowing the elimination of traditional tweeters and their crossover distortion. This results in smoother response both on and off axis, and elimination of off-axis “lobing”, a well documented artifact of the simple crossovers used in conventional multimedia speakers.

Simply stated, the result is greater clarity.

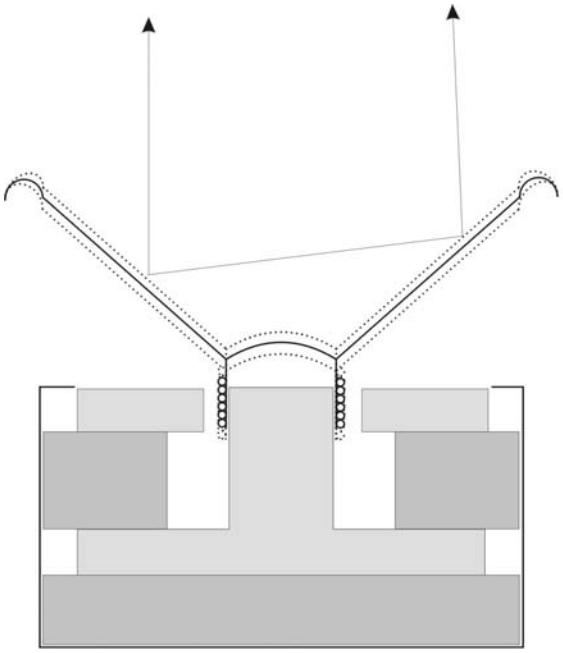

Standard driver

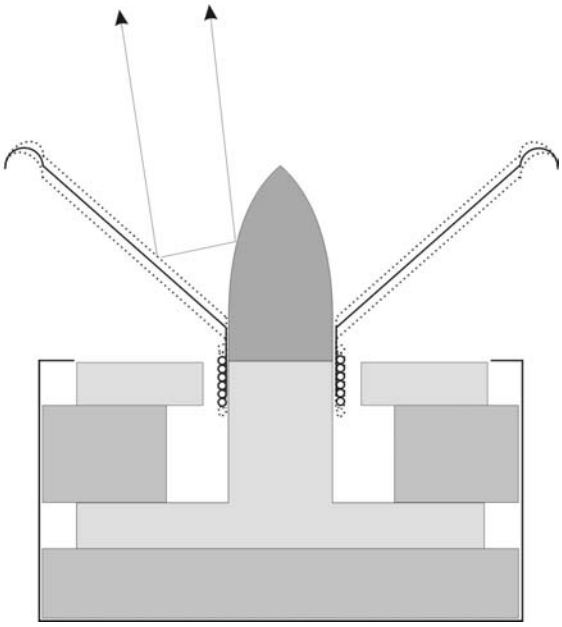

Driver with phase plug

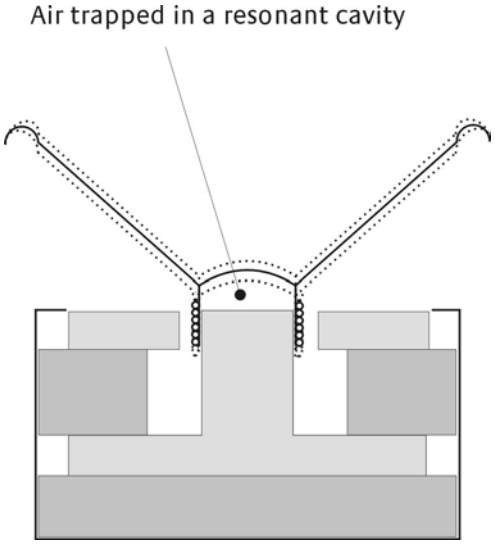


In addition, the dust cap on the standard driver increases the mass of the diaphragm. The increased mass lowers the sensitivity of the driver. With less mass in the diaphragm, the driver with a phase plug has higher sensitivity.

The dust cap creates a cavity beneath it that traps air. As the diaphragm moves back and forth, the trapped air below it must be compressed and expanded with every cycle.

Q: How do they improve power handling?
A: The electrical current fed into the coil generates heat. The heat in turn increases electrical resistance in the driver. With a higher resistance, the driver requires more current to do the same work. Consequently,

the increased resistance decreases the sound output from the driver. As the power handling capacity of a driver is largely a function of heat dissipation, the greater amount of heat a driver can dissipate, the more power it can handle – resulting in higher SPLs.

Typically, the magnet/coil assembly is enclosed in the speaker cabinet and isolated from external air. It therefore dissipates heat more slowly within the speaker enclosure. The phase plug offers two improvements: first, the phase plug itself acts as a heat sink because it is attached to the pole piece and provides greater thermal mass. Second, since the phase plug is exposed to the outside air, it more easily dissipates heat.

Q: Which is better, Dolby or THX?
A: Trick question really, but this was a question we heard from time to time when doing market research for speaker projects. This is an apples to oranges comparison; simply put, Dolby develops technology while THX develops standards.

Here's how they describe themselves:

- Dolby Laboratories develops audio signal processing systems and manufactures professional equipment to implement these technologies in the motion picture, broadcasting and music recording industries. Dolby also licenses these technologies for use in the consumer electronics industry. Dolby's primary commitment is to provide the best possible audio for any entertainment environment, including music, movies, television and multimedia. The privately held company is headquartered in San Francisco, with offices in New York, Los Angeles, Shanghai, Beijing, Tokyo and European headquarters in England.

- The THX Division of Lucasfilm Ltd. is the leading developer of quality assurance programs, services and products for the entertainment and consumer electronics industries. THX assures the finest picture and sound quality for cinemas, mixing studios, home theaters, DVDs and multimedia products. For nearly two decades, THX has played an integral role in the evolution of audio and video standards; defining optimal performance from the most recognized theatre owners, studios, and manufacturers. As a result, THX has earned critical acclaim from virtually every editorial channel, professional organization and consumer worldwide.